Cambridge Assessment International Education

Cambridge IGCSE™

CANDIDATE NAME	

CENTRE NUMBER						CANDIDATE NUMBER					

4291326166

PHYSICS **0625/41**

Paper 4 Theory (Extended) **May/June 2021**

1 hour 15 minutes

You must answer on the question paper.

No additional materials are needed.

INSTRUCTIONS

- Answer **all** questions.
- Use a black or dark blue pen. You may use an HB pencil for any diagrams or graphs.
- Write your name, centre number and candidate number in the boxes at the top of the page.
- Write your answer to each question in the space provided.
- Do **not** use an erasable pen or correction fluid.
- Do **not** write on any bar codes.
- You may use a calculator.
- You should show all your working and use appropriate units.
- Take the weight of 1.0 kg to be 10 N (acceleration of free fall = 10 m/s^2).

INFORMATION

- The total mark for this paper is 80.
- The number of marks for each question or part question is shown in brackets [ ].

This document has **16** pages. Any blank pages are indicated.

DC (ST/JG) 198541/2
© UCLES 2021

[Turn over

www.root19.com +91 - 9969 353 391

1 A skydiver of mass 76 kg is falling vertically in still air. At time $t = 0$, the skydiver opens his parachute.

Fig. 1.1 is the speed–time graph for the skydiver from $t = 0$.

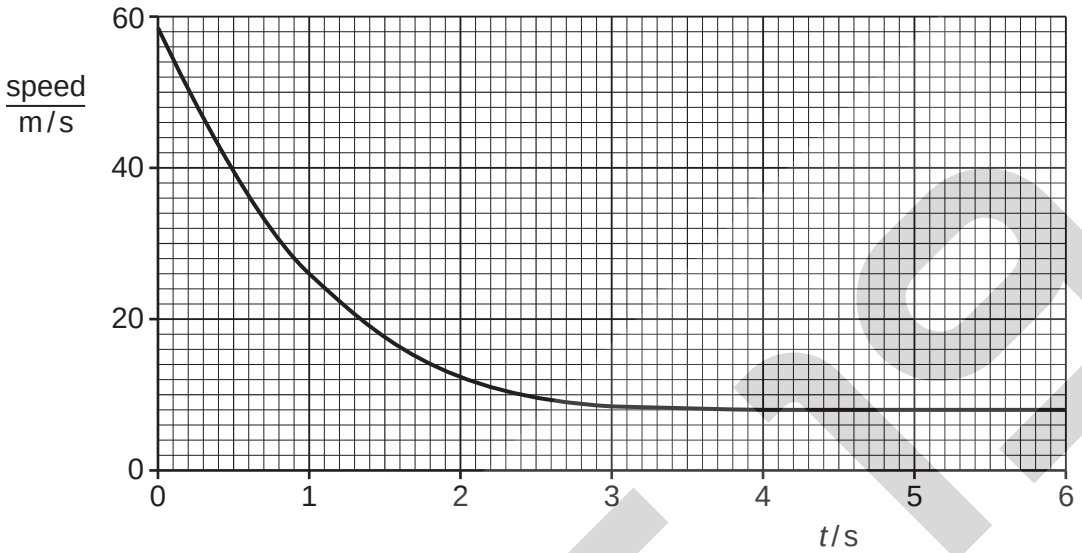

Fig. 1.1

(a) Using Fig. 1.1, determine:

(i) the deceleration of the skydiver immediately after the parachute opens

deceleration = ... [2]

(ii) the force due to air resistance acting on the skydiver immediately after the parachute opens.

force = ... [3]

(b) Explain, in terms of the forces acting on the skydiver, his motion between $t = 0$ and $t = 6.0$ s.

.....

.....

.....

..... [3]

(c) Explain why opening the parachute cannot reduce the speed of the skydiver to zero.

.....

.....

..... [2]

[Total: 10]

www.root19.com +91 - 9969 353 391

2 Fig. 2.1 shows a wooden trolley of mass 1.2 kg at rest on the rough surface of a bench.

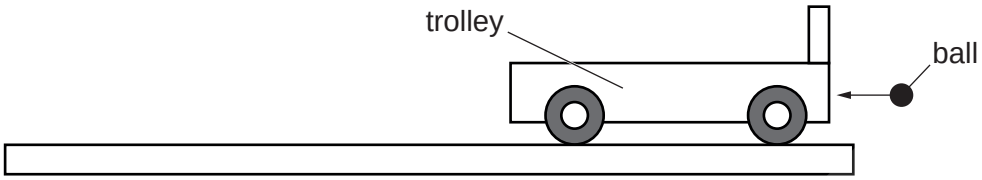

Fig. 2.1

A ball of mass 0.52 g travels horizontally towards the trolley. The ball embeds itself in the wood of the trolley. The trolley moves with an initial speed of 0.065 m/s.

(a) Calculate:

(i) the impulse exerted on the trolley

impulse = ... [2]

(ii) the speed of the ball as it hits the trolley.

speed = ... [2]

(b) As the trolley moves across the rough surface, it slows down and stops.

Explain, in terms of the work done, the energy change that takes place as the trolley slows down.

.....

.....

.....

..... [3]

[Total: 7]

© UCLES 2021

www.root19.com
+91 - 9969 353 301

3 **(a)** Explain, in terms of molecules, why liquids are very difficult to compress.

.....

.....

..... [2]

(b) Fig. 3.1 shows a device that uses liquid pressure to lift heavy boxes.

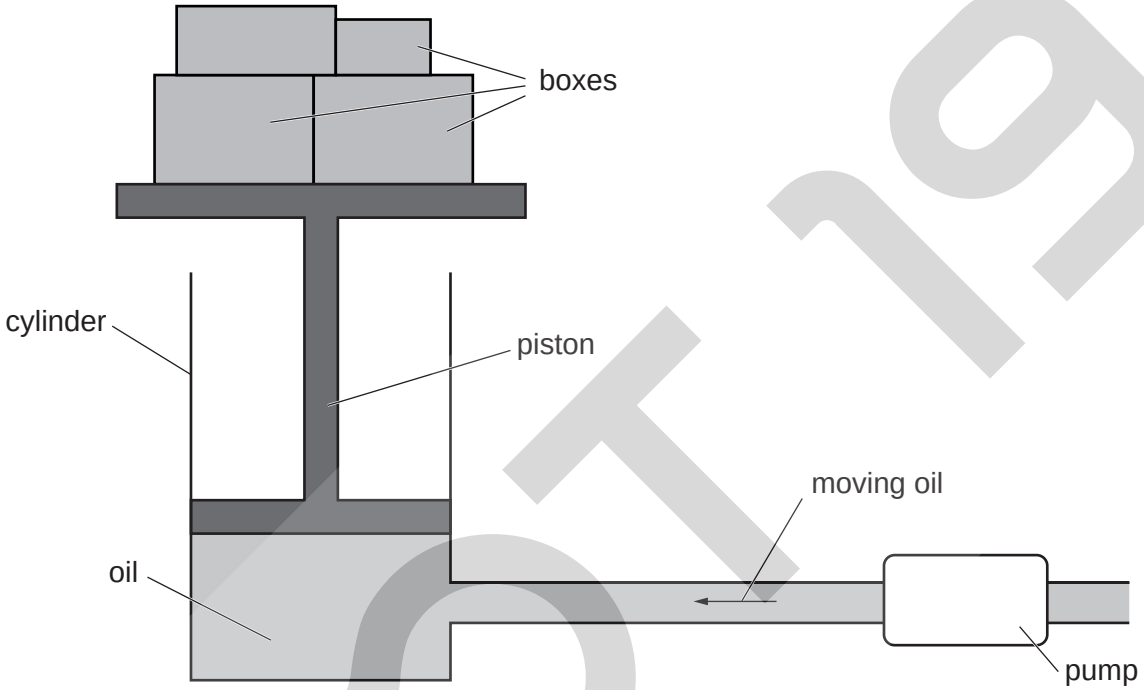

Fig. 3.1

The boxes are lifted by pumping oil into the cylinder.

The force upwards on the piston due to the oil, and the force downwards on the piston due to the air above the piston, combine to produce a constant force of 8800 N.

The pressure of the air is 1.0×10^5 Pa and the cross-sectional area of the bottom surface of the piston is $0.016\,m^2$.

(i) Calculate the pressure of the oil at the bottom surface of the piston.

pressure = ... [3]

www.root19.com +91 - 9969 353 391

(ii) As the boxes are lifted, the depth of the oil increases.

Explain why the pump must exert an increasing pressure on the oil as the depth of the oil increases.

.....

.....

..... [2]

(iii) Suggest **one** reason why the force of 8800 N in **(b)** cannot lift boxes of weight 8800 N.

.....

..... [1]

[Total: 8]

© UCLES 2021

www.root19.com +91 - 9969 353 301

4 An aluminium saucepan with a plastic handle contains cold water.

Fig. 4.1 shows the saucepan on a hotplate.

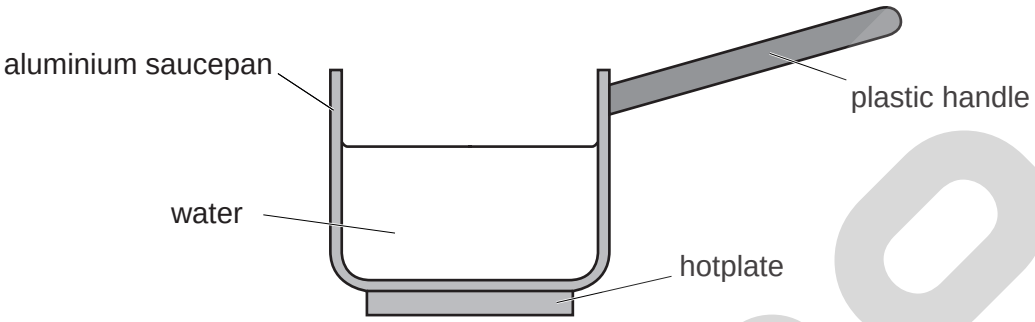

Fig. 4.1

(a) State why the pan is made from aluminium but the handle is made from plastic.

.....

..... [1]

(b) The hotplate is switched on and, as the temperature of the water increases, the internal energy of the water increases.

(i) State, in terms of molecules, what is meant by *an increase in internal energy*.

.....

..... [1]

(ii) Explain, in terms of the atomic lattice and electrons, how thermal energy is transferred through the aluminium.

.....

.....

.....

..... [3]

(iii) Eventually, the water reaches boiling point. Thermal energy from the hotplate is still being transferred to the water.

Explain, in terms of molecules, the effect of this thermal energy on the water.

.....

.....

.....

..... [3]

www.root19.com +91 - 9969 353 391

(iv) The mass of the water decreases by 0.11 kg in 300 s. The specific latent heat of vaporisation of water is 2.3×10^6 J / kg.

Calculate the rate at which the water gains thermal energy.

rate of gain of energy = ... [3]

[Total: 11]

www.root19.com +91 - 9969 353 301

5 Fig. 5.1 shows the structure of a liquid-in-glass thermometer.

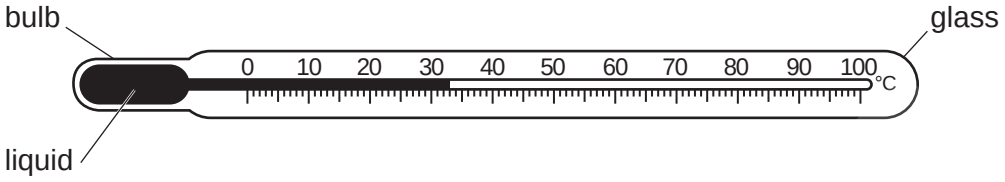

Fig. 5.1

The bulb of the thermometer is placed into a beaker of warm water. As the liquid expands, it moves along the tube.

(a) Explain, in terms of molecules, why a liquid expands when heated.

.....

.....

..... [2]

(b) Explain, in terms of molecules, why a liquid expands more than a solid when heated.

.....

.....

..... [2]

(c) A second thermometer has a larger bulb that contains more of the same liquid than the thermometer shown in Fig. 5.1. It has a different scale. In every other way, it is identical.

(i) Explain how the sensitivity of the second thermometer compares with the sensitivity of the thermometer in Fig. 5.1.

.....

.....

..... [2]

(ii) Explain how the range of the second thermometer compares with the range of the thermometer in Fig. 5.1.

.....

..... [1]

© UCLES 2021

www.root19.com
+91 - 9969 353 391

(d) **(i)** State **one** everyday problem that is a result of thermal expansion.

.....

..... [1]

(ii) Suggest and explain **one** way of solving this problem.

.....

.....

..... [2]

[Total: 10]

www.root19.com +91 - 9969 353 301

6 Fig. 6.1 is a full-scale diagram that represents a sound wave travelling in air.

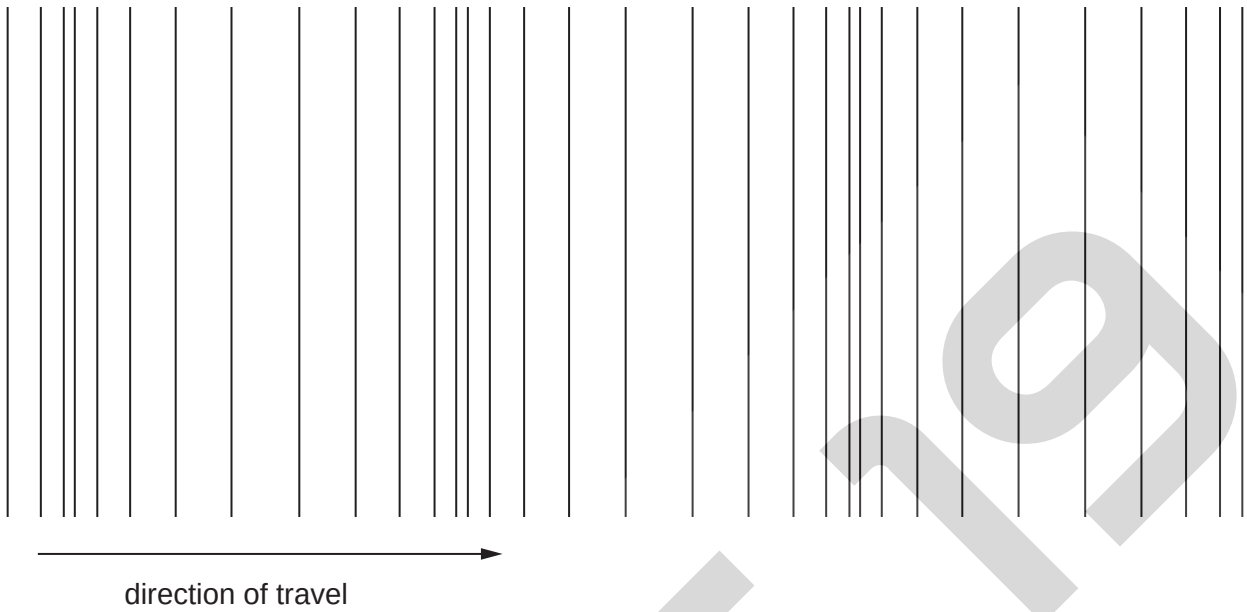

Fig. 6.1

(a) On Fig. 6.1, mark **two** points, each at the centre of a different compression. Label both of the points C. [1]

(b) The speed of sound in air is 330 m / s.

Measure the diagram and determine the frequency of the sound.

frequency = ... [3]

www.root19.com +91 - 9969 353 391

(c) The wave reaches a barrier. Fig. 6.2 shows the wave passing through a gap in the barrier.

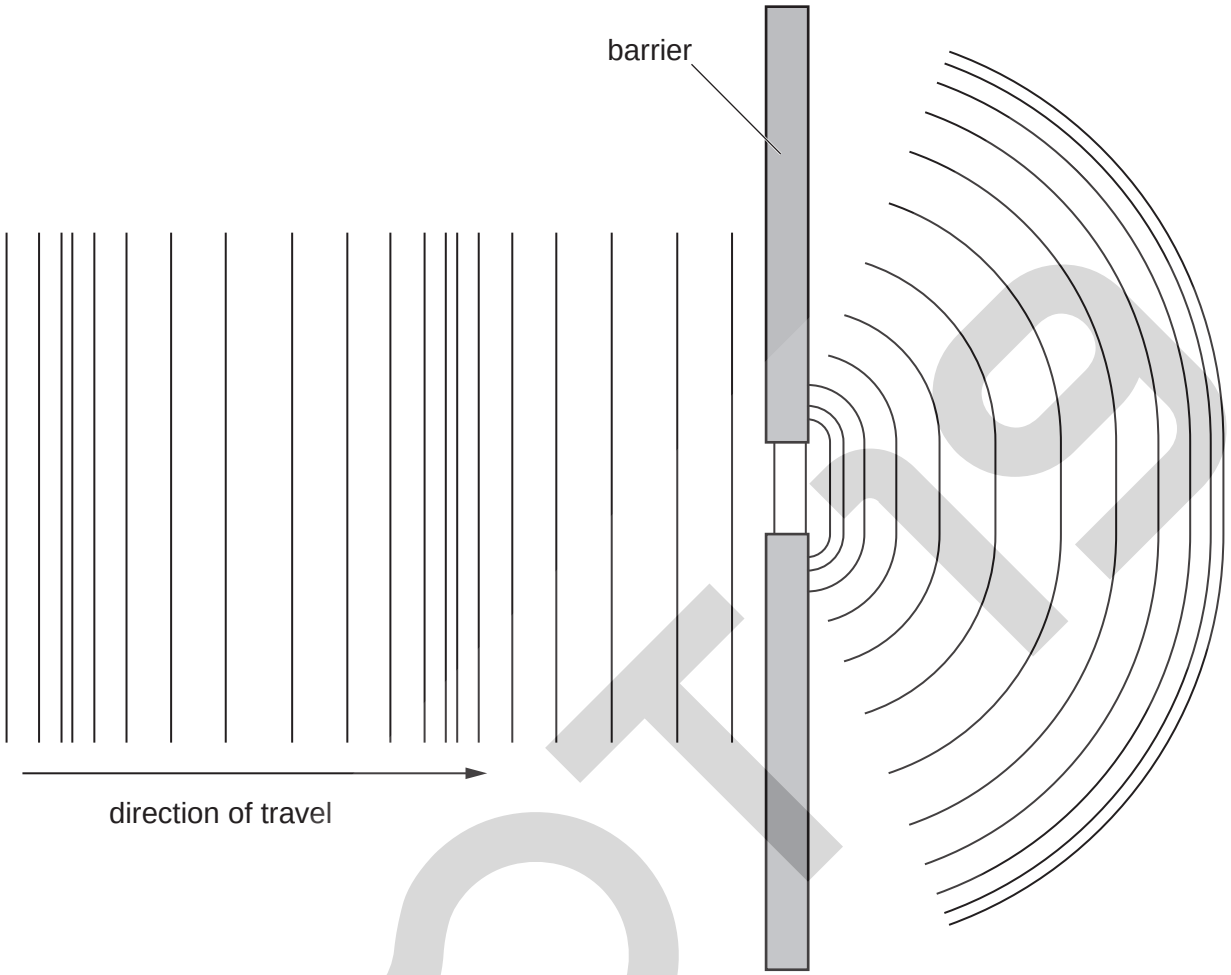

Fig. 6.2

The frequency of the wave is increased to a value many times greater than the value obtained in **(b)**.

Describe and explain **two** ways in which a diagram representing the wave with the greater frequency differs from Fig. 6.2.

1. .....

.....

2. .....

.....

[3]

[Total: 7]

www.root19.com +91 - 9969 353 301

7 Fig. 7.1 represents an alternating current (a.c.) generator.

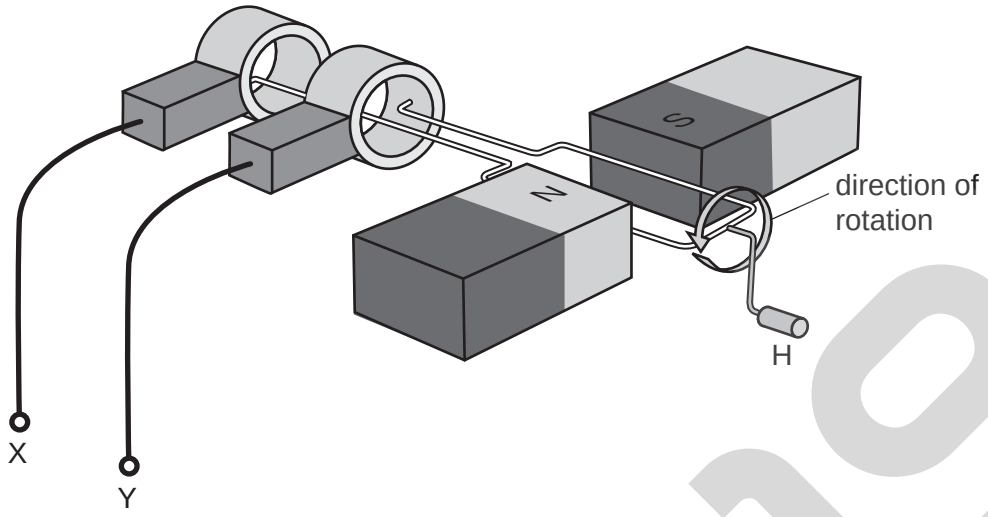

Fig. 7.1

(a) A student rotates the handle H, as shown in Fig. 7.1.

(i) On Fig. 7.2, sketch a graph to show how the electromotive force (e.m.f.) between terminals X and Y varies with time during **two** complete revolutions of the coil.

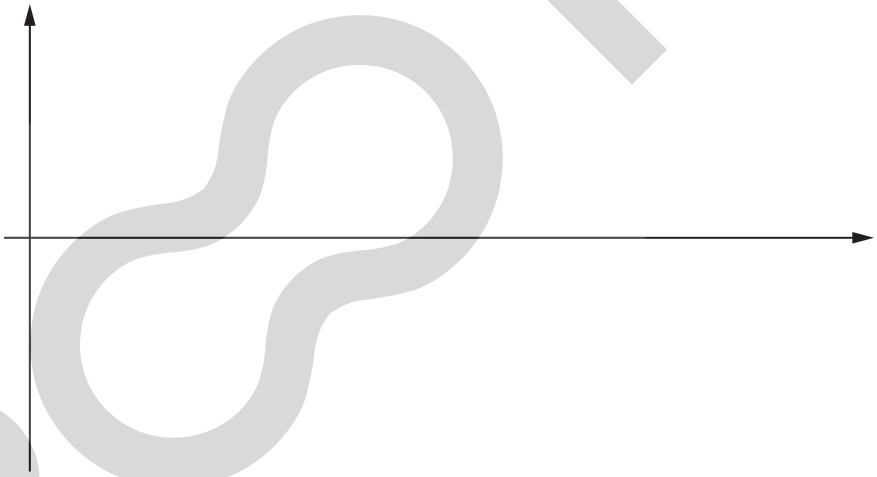

Fig. 7.2

[3]

(ii) On Fig. 7.2, mark and label a point P, for the e.m.f. when the coil is horizontal, as shown in Fig. 7.1. [1]

(iii) The student turns the handle more quickly.

State **two** ways in which the e.m.f. between terminals X and Y changes.

1. .....

2. .....

[2]

www.root19.com +91 - 9969 353 391

(b) Terminals X and Y are connected to the primary coil of a transformer.

State and explain what happens in the transformer as the student turns the handle of the a.c. generator.

.....

.....

.....

..... [3]

(c) Explain why the power losses in transmission cables are lower when electrical energy is transmitted at higher voltages.

.....

.....

..... [2]

[Total: 11]

ROOT 19

www.root19.com +91 - 9969 353 301

8 A student sets up a circuit that includes a 12 V battery, an 800 Ω resistor, a voltmeter and a thermistor. Fig. 8.1 is an incomplete circuit diagram because the symbol for the thermistor is missing.

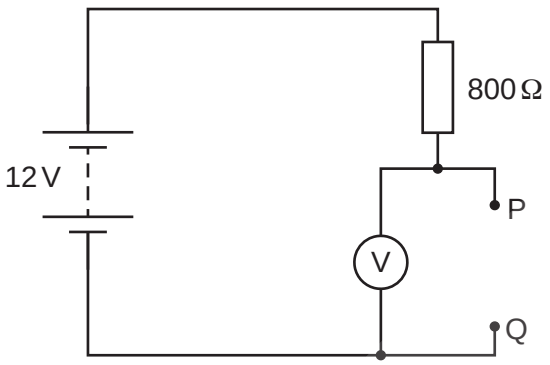

Fig. 8.1

The thermistor is connected between terminals P and Q.

(a) Complete Fig. 8.1 by drawing the symbol for a thermistor between terminals P and Q. [1]

(b) The 12 V battery consists of eight identical cells connected in series.

Calculate the electromotive force (e.m.f.) of each cell.

e.m.f. = ... [1]

(c) The reading on the voltmeter is 8.0 V.

(i) Determine the resistance of the thermistor.

resistance = ... [3]

(ii) A few hours later, the student notices that the reading on the voltmeter is greater.

Explain what can be deduced from this observation.

.....

.....

.....

..... [3]

[Total: 8]

www.root19.com +91 - 9969 353 391

9 There are three naturally occurring isotopes of hydrogen: hydrogen-1, hydrogen-2 and hydrogen-3. The nuclide notation for hydrogen-1 is $^{1}_{1}H$.

(a) Write down the symbol, using nuclide notation, for:

hydrogen-2 .....

hydrogen-3. .....

[1]

(b) In a fusion reactor, a nucleus of hydrogen-2 and a nucleus of hydrogen-3 undergo fusion.

(i) State what is meant by *nuclear fusion*.

.....

.....

..... [2]

(ii) The fusion reaction produces a free neutron and **one** other particle.

Write down, using nuclide notation, the equation that represents this reaction.

[3]

(c) Nuclear fusion in the Sun is the source of most but not all of the resources that are used to generate electrical energy on Earth.

State **two** resources for which nuclear fusion in the Sun is **not** the source.

1. .....

2. .....

[2]

[Total: 8]

© UCLES 2021

www.root19.com +91 - 9969 353 391

BLANK PAGE

Permission to reproduce items where third-party owned material protected by copyright is included has been sought and cleared where possible. Every reasonable effort has been made by the publisher (UCLES) to trace copyright holders, but if any items requiring clearance have unwittingly been included, the publisher will be pleased to make amends at the earliest possible opportunity.

To avoid the issue of disclosure of answer-related information to candidates, all copyright acknowledgements are reproduced online in the Cambridge Assessment International Education Copyright Acknowledgements Booklet. This is produced for each series of examinations and is freely available to download at www.cambridgeinternational.org after the live examination series.

Cambridge Assessment International Education is part of the Cambridge Assessment Group. Cambridge Assessment is the brand name of the University of Cambridge Local Examinations Syndicate (UCLES), which itself is a department of the University of Cambridge.